Together, we are brighter.

PROJECT: _____

TYPE: _____

CAT #: _____

LAB-068

DESCRIPTION

Accessory, Brass - Antique, Micro, 60° Uplight Package

SPECIFICATIONS

Construction	Brass
Lead Wire	6'
Voltage	10-15V
Mounting	LAP-002 (8" Stake)
Light Warranty	Lifetime

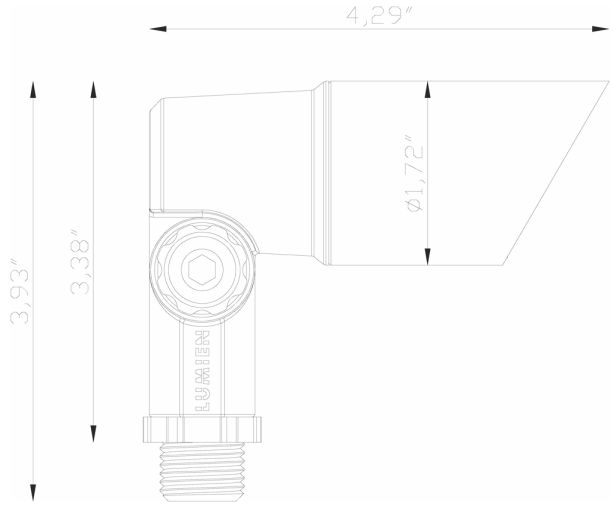

FINISHES

Antique

Black

NOTES

Lumien Lighting
770-485-9002
orders@lumienlighting.com
www.lumienlighting.com

Lumien Lighting reserves the right to modify product specifications without notification. © 2023 Lumien Enterprise Inc.

ORDERING GUIDE

	MODULE TYPE (required)	WATTS	COLOR TEMP	BEAM SPREAD	FINISH
LAB-068 +	CORE: M4B1	3.5W 5.5W	2700K 3000K	40° 60°	A
LAB-068 +	PRO: M7B1	4.5W	2700-5700K	40° 60°	A BK
LAB-068 +	PRO: M8B1	3W	2700-5700K	40°	A BK

ACCESSORIES

Accessories - Pro Series (Optional)

LP-REMOTE LumienPRO Remote

Mounts - (Optional)

M4B1-5.5W-30K-60-A M4B1, Antiq Brass, 5.5W, 435 Lm, 30K, 60°

Additional Mounts - Ground (Optional)

LAP-001 Plastic, 1/2" Threaded 12" Spike
LAP-015 Plastic, Micro, Asymmetrical Optic Lens
LAS-002 Stainless Steel, Trident Stake, 12"
LAS-002-6 Stainless Steel, Trident Stake, 6"
LAS-003 Stainless Steel, 1/2" Threaded Mini Stake,

MODULES

	CORE	CORE	PRO	PRO
	M4B1-3.5W-27K-40-A **M4B1-3.5W-27K-60-A** **M4B1-3.5W-30K-40-A** **M4B1-3.5W-30K-60-A**	**M4B1-5.5W-27K-40-A** **M4B1-5.5W-27K-60-A** **M4B1-5.5W-30K-40-A**	**M7B1-4.5W-40-BK** **M7B1-4.5W-60-A**	**M8B1-3W-27K-40-A** **M8B1-3W-27K-40-BK** **M8B1-3W-30K-40-A** **M8B1-3W-30K-40-BK**
Construction	Brass	Brass	Brass	Brass
Finish	Antique	Antique	Black, Antique	Antique, Black
Input Voltage	10-15V	10-15V	10-15V	10-15V
Wattage (Volt Amps)	3.5W (5.59)	5.5W (8.66)	4.5W (7.66)	3W (4.83)
Module Lumens	325 Lm	435 Lm	350 Lm	158 Lm
Color Temperature	2700K, 3000K	2700K, 3000K	2700-5700K	2700-5700K
Beam Spread	40°, 60°	40°, 60°	40°, 60°	40°
Lead Wire Length	6'	6'	6'	6'
CRI	80+	80+	80+	80+
RGB	No	No	No	Yes
Dimmable	Primary Dimming	Primary Dimming	Primary Dimming	Primary Dimming
Rated Life	50,000 Hrs	50,000 Hrs	50,000 Hrs	50,000 Hrs
Warranty	10 Years	10 Years	10 Years	10 Years
Core Drill Size	-	-	-	-

ACCESSORIES

Accessories - Pro Series

LP-REMOTE

LumienPRO Remote (Functionality determined by the Light Fixture)

Mounts -

M4B1-5.5W-30K-60-A

Micro, Integrated Modular, Brass - Antique, 5.5W, 435 Lm, 3000K, 60°, 10-15V

Additional Mounts - Ground

LAP-001

Accessory, Plastic, 1/2" Threaded 12" Spike

LAP-015

Accessory, Plastic, Micro, Asymmetrical Optic Lens

LAS-002

Accessory, Stainless Steel, Trident Stake, 12"

LAS-002-6

Accessory, Stainless Steel, Trident Stake, 6"

LAS-003

Accessory, Stainless Steel, 1/2" Threaded Mini Stake, 6"